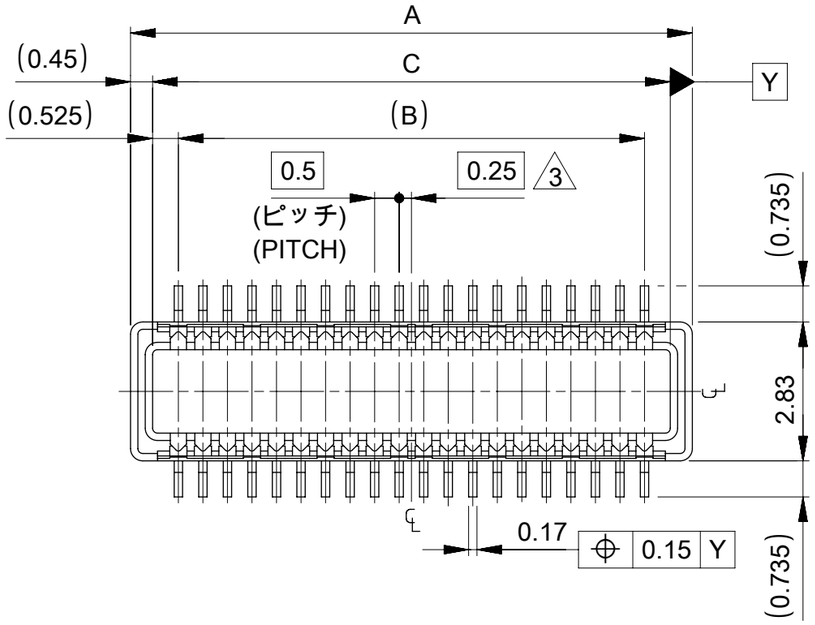

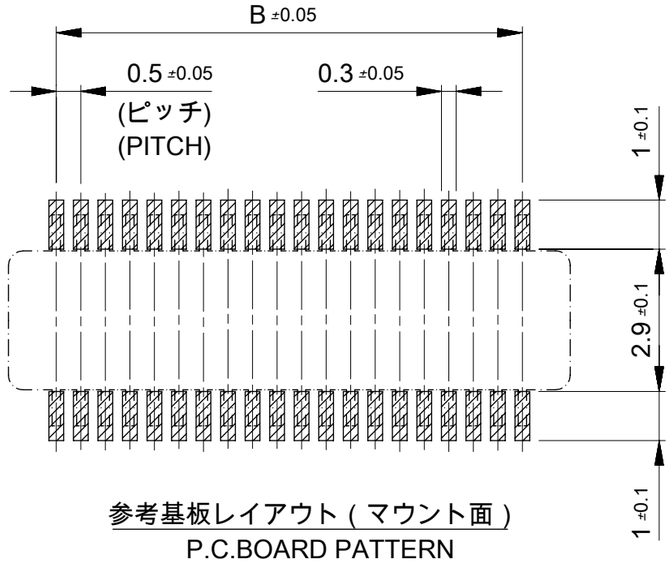

参考基板レイアウト (マウント面)
P.C.BOARD PATTERN
DIMENSION. (REF.)
(MOUNTING AREA)

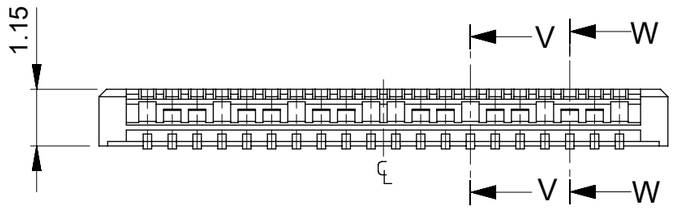

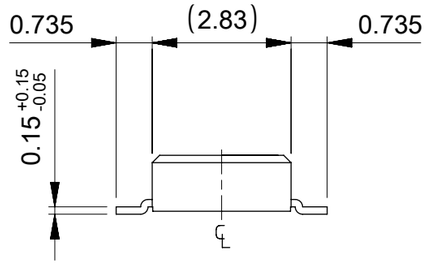

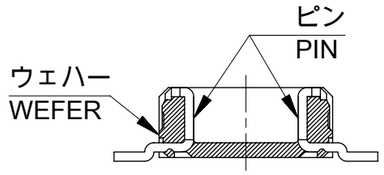

SECTION W-W (LOCK PART)

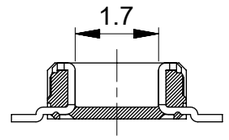

SECTION V-V (W/O LOCK PART)

LOCK POSITION 1 2 3 ——— N-2N-1N

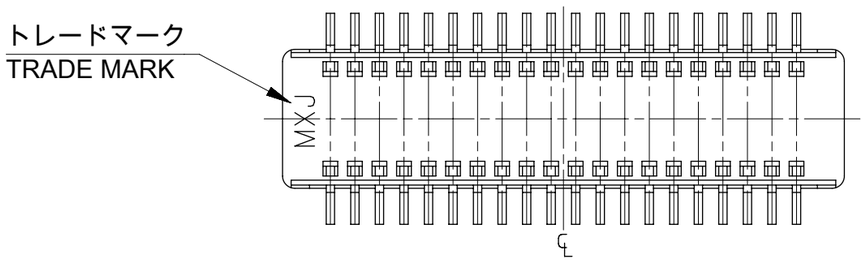

NON	20.55	19.5	21.45	55560-0807	80
10,21	15.55	14.5	16.45	55560-0607	60
2,4,8,10,16,18,22,24	13.05	12.0	13.95	55560-0507	50
2,3,5,6,8,9,12,13,15,16,18,19	10.55	9.5	11.45	55560-0407	40
2,3,4,5,7,8,9,10,11,13,14,15,16	9.05	8.0	9.95	55560-0347	34
ALL	8.05	7.0	8.95	55560-0307	30
	6.55	5.5	7.45	55560-0247	24
	6.05	5.0	6.95	55560-0227	22
	5.55	4.5	6.45	55560-0207	20
	4.55	3.5	5.45	55560-0168	16
LOCK POSITION	C	B	A	Emboss tape Package ORDER No. オーダー番号	極数 CIRCUIT
CONNECTOR SERIES No. 55560-***1					

THIS DRAWING CONTAINS INFORMATION THAT IS PROPRIETARY TO MOLEX ELECTRONIC TECHNOLOGIES, LLC AND SHOULD NOT BE USED WITHOUT WRITTEN PERMISSION

GENERAL TOLERANCES (UNLESS SPECIFIED)	
10^{UNDER}	±0.2
$10^{OVER}30^{UNDER}$	±0.25
30^{OVER}	±0.3
ANGULAR	±3°

DRAFT WHERE APPLICABLE MUST REMAIN WITHIN DIMENSIONS

DIMENSION UNITS	SCALE
mm	8:1

GENERAL TOLERANCES (UNLESS SPECIFIED)

ANGULAR TOL	±	°
4 PLACES	±	
3 PLACES	±	
2 PLACES	±	
1 PLACE	±	
0 PLACES	±	

DRAFT WHERE APPLICABLE MUST REMAIN WITHIN DIMENSIONS

CURRENT REV DESC: REMOVED OBSOLETED PART NUMBERS AS PER PCN#515181

EC NO: 794166
DRWN: VISHAH2 2024/05/28
CHK'D: GGA 2024/08/20
APPR: GGA 2024/08/20

INITIAL REVISION:
DRWN: SAIHARA 2003/03/31
APPR: MSASAO 2003/03/31

THIRD ANGLE PROJECTION | DRAWING: A3-SIZE | SERIES: 55560

molex

0.5 MM PITCH B-TO-B CONN.
HEIGHT = 1.5 PLUG

PRODUCT CUSTOMER DRAWING

DOCUMENT NUMBER	DOC TYPE	DOC PART	REVISION
SD-55560-006	PSD	001	M1

MATERIAL NUMBER	CUSTOMER	SHEET NUMBER
SEE TABLE	GENERAL	1 OF 2

DOCUMENT STATUS	P1	RELEASE DATE	2024/08/20 07:34:21

FORMAT: master-tb-prod-A3
REVISION: J1
DATE: 2021/05/01

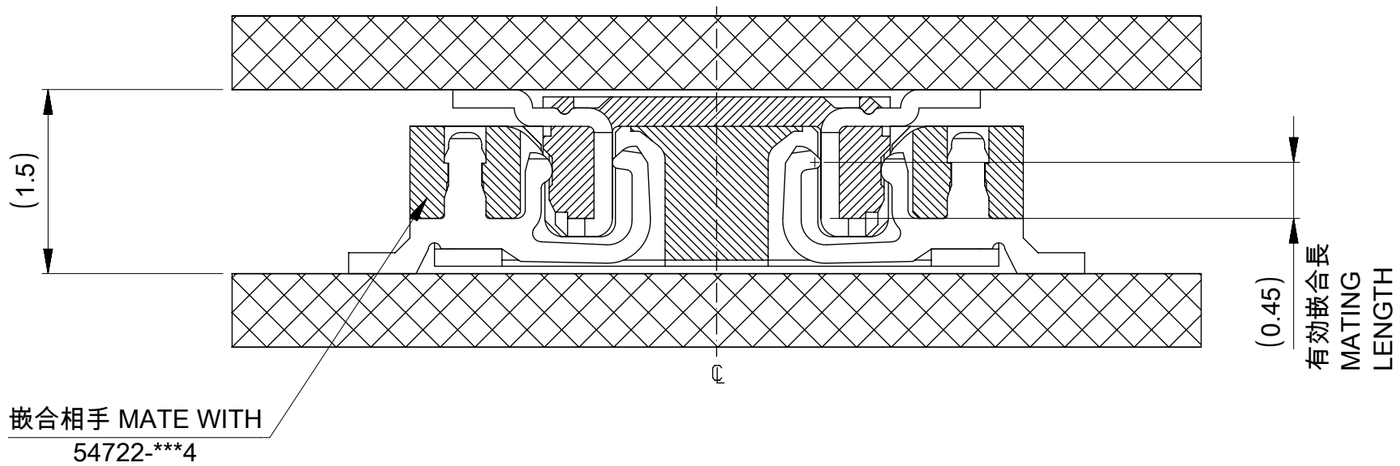

嵌合断面図 (参考)

MATED DRAWING (REF.)

注記 NOTES:

1. 使用材料 MATERIAL
   ウェハー : 液晶ポリマーガラス充填, UL94V-0 (黒)
   WAFER : LIQUID CRYSTRAL POLYMER
   (GLASS FILLED),UL94V-0 (COLOR:BLACK)
   ピン : 黄銅 (t =0.15)
   PIN : BRASS(t=0.15)
2. メッキ仕様 PLATING
   金メッキ 0.25 MICROMETER MINIMUM (コンタクト部)
   GOLD 0.25 MICROMETER MINIMUM (CONTACT AREA).
   金メッキ 0.4 MICROMETER MAXIMUM (テール部)
   GOLD 0.4 MICROMETER MAXIMUM (TAIL AREA).
   下地メッキ: ニッケルメッキ 1.5 MICROMETER MINIMUM
   UNDER PLATING : NICKEL 1.5 MICROMETER MINIMUM.
3. (全極数 / 2) = 偶数の場合に適用.
   APPLY FOR (CIRCUIT/2) = EVEN.
4. 嵌合相手 : 54722 シリーズ (嵌合高さ = 1.5mm)
   MATE WITH: 54722 SERIES.(HEIGHT=1.5mm)
5. テール平坦度は、0.1 MAXIMUM
   TAIL COPLANARITY TO BE 0.1 MAXIMUM.

THIS DRAWING CONTAINS INFORMATION THAT IS PROPRIETARY TO MOLEX ELECTRONIC TECHNOLOGIES, LLC AND SHOULD NOT BE USED WITHOUT WRITTEN PERMISSION

GENERAL TOLERANCES (UNLESS SPECIFIED)	
10^{UNDER}	±0.2
$10^{OVER}30^{UNDER}$	±0.25
30^{OVER}	±0.3
ANGULAR±3°	
DRAFT WHERE APPLICABLE MUST REMAIN WITHIN DIMENSIONS	

DIMENSION UNITS	SCALE
mm	20:1

GENERAL TOLERANCES (UNLESS SPECIFIED)	
ANGULAR TOL	± °
4 PLACES	±
3 PLACES	±
2 PLACES	±
1 PLACE	±
0 PLACES	±
DRAFT WHERE APPLICABLE MUST REMAIN WITHIN DIMENSIONS	

CURRENT REV DESC: REMOVED OBSOLETED PART NUMBERS AS PER PCN#515181

EC NO: 794166
DRWN: VISHAH2 2024/05/28
CHK'D: GGA 2024/08/20
APPR: GGA 2024/08/20

INITIAL REVISION:
DRWN: SAIHARA 2003/03/31
APPR: MSASAO 2003/03/31

molex

0.5 MM PITCH B-TO-B CONN.
HEIGHT = 1.5 PLUG

PRODUCT CUSTOMER DRAWING

DOCUMENT NUMBER	DOC TYPE	DOC PART	REVISION
SD-55560-006	PSD	001	M1

THIRD ANGLE PROJECTION	DRAWING	SERIES	MATERIAL NUMBER	CUSTOMER	SHEET NUMBER
	A3-SIZE	55560	SEE TABLE	GENERAL	2 OF 2

DOCUMENT STATUS	P1	RELEASE DATE	2024/08/20 07:34:21

FORMAT: master-tb-prod-A3
REVISION: J1
DATE: 2021/05/01

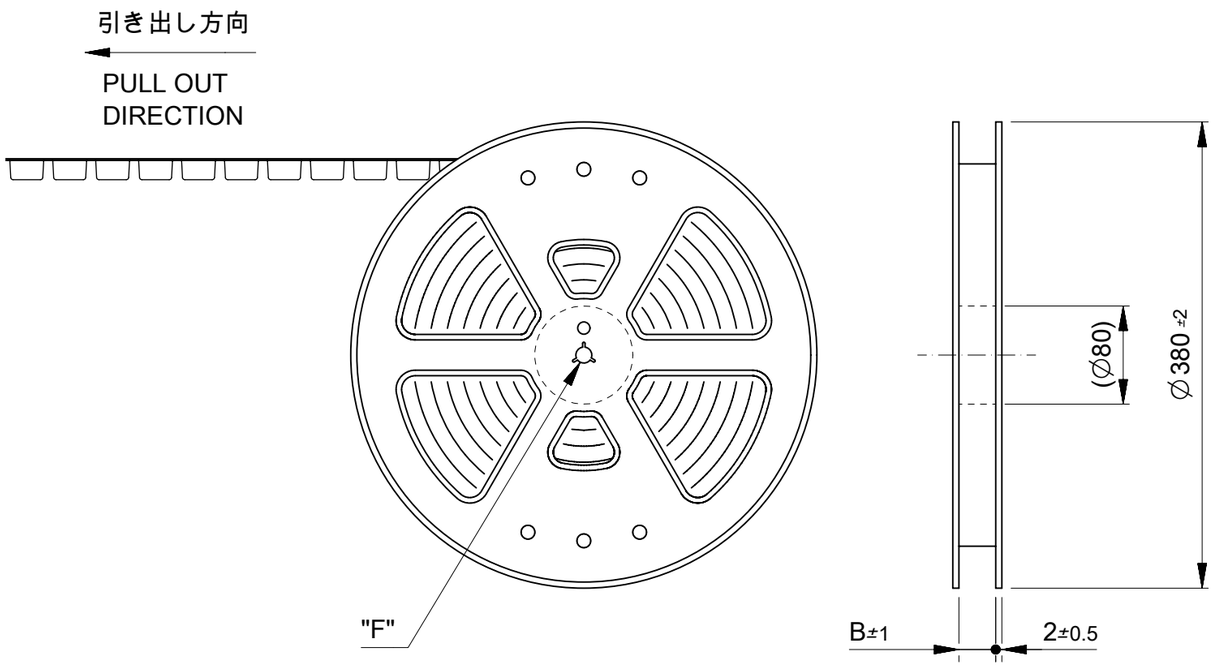

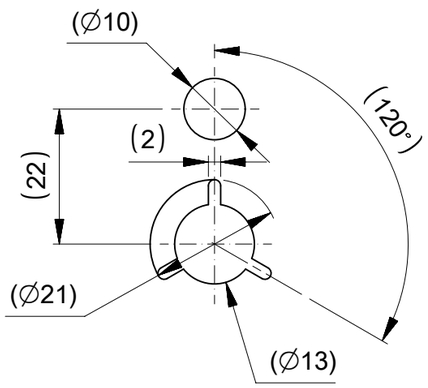

DETAIL "F"

NOTE

1. 製品詳細寸法については図面 SD-55560-006 を参照下さい.
   DETAIL DIMENSIONS, SEE SD-55560-006
2. 梱包数量 : 3000個 / リール
   NUMBER OF CONNECTORS : 3000PCS/REEL
3. リードテープ長さ LEAD TAPE LENGTH

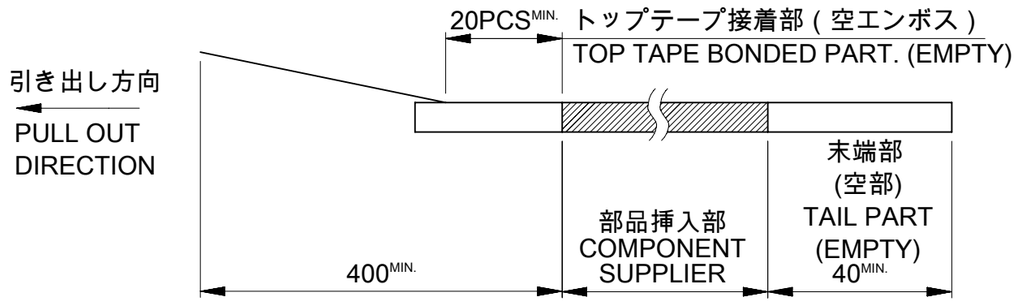

4. トップテープの剥離強度 : 0.1N~0.7N(10.2gf~71.4gf)
   (剥離方向は下図参照)
   尚、本規格値は出荷時に適用. (但し、輸送時に剥離が発生しないこと.)
   PEELING OFF FORCE OF TOP TAPE : 0.1N~0.7N(10.2gf~71.4gf)
   (PEELING DIRECTION AS SHOWN IN FOLLOWING FIG,)
   THIS REQUIREMENT SHOULD BE APPLIED AT SHIPMENT.
   PEEL OFF SHOULD NOT BE ALLOWED, DURING TRANSPORTATION.

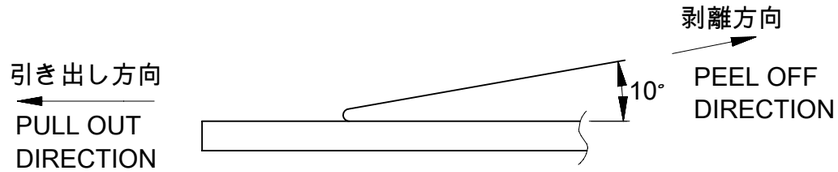

5. 材料　キャリアテープ : ポリプロピレン (PP)
   トップテープ : PET,PE,PEF
   リール : ポリスチレン (PS) < リサイクル材を含む >
   MATERIAL CARRIER TAPE : POLYPROPYLENE
   TOP TAPE : PET,PE,PEF
   REEL : POLYSTYRENE(PS)
   < RECYCLE MATERIAL CONTAINED >

THIS DRAWING CONTAINS INFORMATION THAT IS PROPRIETARY TO MOLEX ELECTRONIC TECHNOLOGIES, LLC AND SHOULD NOT BE USED WITHOUT WRITTEN PERMISSION

GENERAL TOLERANCES (UNLESS SPECIFIED)	
10 UNDER	±0.2
10 OVER 30 UNDER	±0.25
30 OVER	±0.3
ANGULAR±3°	
DRAFT WHERE APPLICABLE MUST REMAIN WITHIN DIMENSIONS	

DIMENSION UNITS	SCALE
mm	NTS
GENERAL TOLERANCES (UNLESS SPECIFIED)	
ANGULAR TOL ±	°
4 PLACES	±
3 PLACES	±
2 PLACES	±
1 PLACE	±
0 PLACES	±
DRAFT WHERE APPLICABLE MUST REMAIN WITHIN DIMENSIONS	

CURRENT REV DESC: REMOVED OBSOLETED PART NUMBERS AS PER PCN#515181

EC NO:	794166	
DRWN:	VISHAH2	2024/05/28
CHK'D:	GGA	2024/08/20
APPR:	GGA	2024/08/20
INITIAL REVISION:		
DRWN:	S.AIHARA	2000/11/28
APPR:	M.FUKUSHIMA	2001/01/30

THIRD ANGLE PROJECTION | DRAWING: A3-SIZE | SERIES: 55560

molex

0.5 MM PITCH B-TO-B CONN.
HEIGHT = 1.5 PLUG EMBOSS TAPE PACKAGE

PRODUCT CUSTOMER DRAWING

DOCUMENT NUMBER	DOC TYPE	DOC PART	REVISION
SD-55560-007	PSD	001	L1

MATERIAL NUMBER	CUSTOMER	SHEET NUMBER
SEE SHEET 2-5	GENERAL	1 OF 5

DOCUMENT STATUS	P1	RELEASE DATE	2024/08/20 07:34:21

FORMAT: master-tb-prod-A3
REVISION: J1
DATE: 2021/05/01

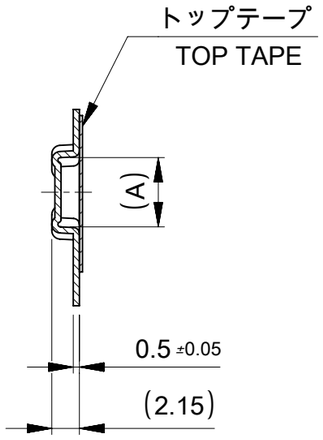

SECTION Y-Y

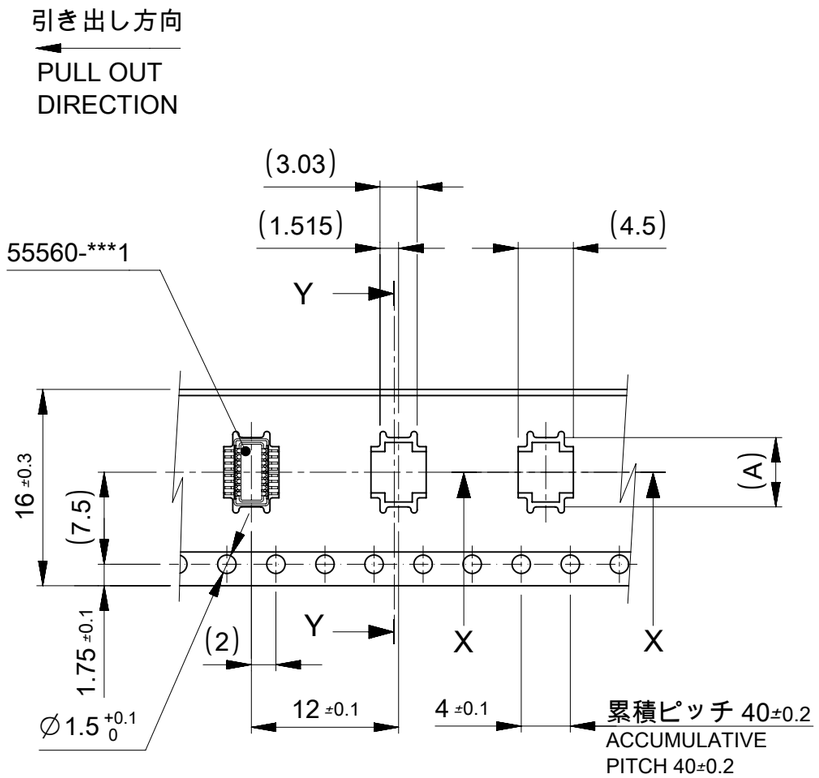

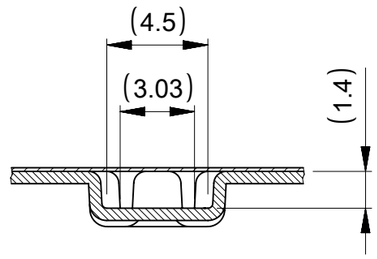

SECTION X-X

SCALE 5:1

16 mm幅キャリアテープ

16mm WIDTH CARRIER TAPE

16	17.5	6.65	55560-0207	20
キャリアテープ幅 CARRIER TAPE WIDTH	B	(A)	MATERIAL NO.	極数 CIRCUIT

THIS DRAWING CONTAINS INFORMATION THAT IS PROPRIETARY TO MOLEX ELECTRONIC TECHNOLOGIES, LLC AND SHOULD NOT BE USED WITHOUT WRITTEN PERMISSION

DIMENSION UNITS	SCALE
mm	NTS

GENERAL TOLERANCES (UNLESS SPECIFIED)	
10 UNDER	±0.2
10 OVER 30 UNDER	±0.25
30 OVER	±0.3
ANGULAR±3°	
DRAFT WHERE APPLICABLE MUST REMAIN WITHIN DIMENSIONS	

GENERAL TOLERANCES (UNLESS SPECIFIED)	
ANGULAR TOL	± °
4 PLACES	±
3 PLACES	±
2 PLACES	±
1 PLACE	±
0 PLACES	±
DRAFT WHERE APPLICABLE MUST REMAIN WITHIN DIMENSIONS	

CURRENT REV DESC: REMOVED OBSOLETED PART NUMBERS AS PER PCN#515181

EC NO: 794166
DRWN: VISHAH2 2024/05/28
CHK'D: GGA 2024/08/20
APPR: GGA 2024/08/20

INITIAL REVISION:
DRWN: S.AIHARA 2000/11/28
APPR: M.FUKUSHIMA 2001/01/30

molex

0.5 MM PITCH B-TO-B CONN.
HEIGHT = 1.5 PLUG EMBOSS TAPE PACKAGE

PRODUCT CUSTOMER DRAWING

THIRD ANGLE PROJECTION	DRAWING	SERIES	MATERIAL NUMBER	CUSTOMER	SHEET NUMBER
	A3-SIZE	55560	SEE SHEET 2-5	GENERAL	2 OF 5

DOCUMENT NUMBER	DOC TYPE	DOC PART	REVISION
SD-55560-007	PSD	001	L1

DOCUMENT STATUS	P1	RELEASE DATE	2024/08/20 07:34:21

FORMAT: master-tb-prod-A3
REVISION: J1
DATE: 2021/05/01

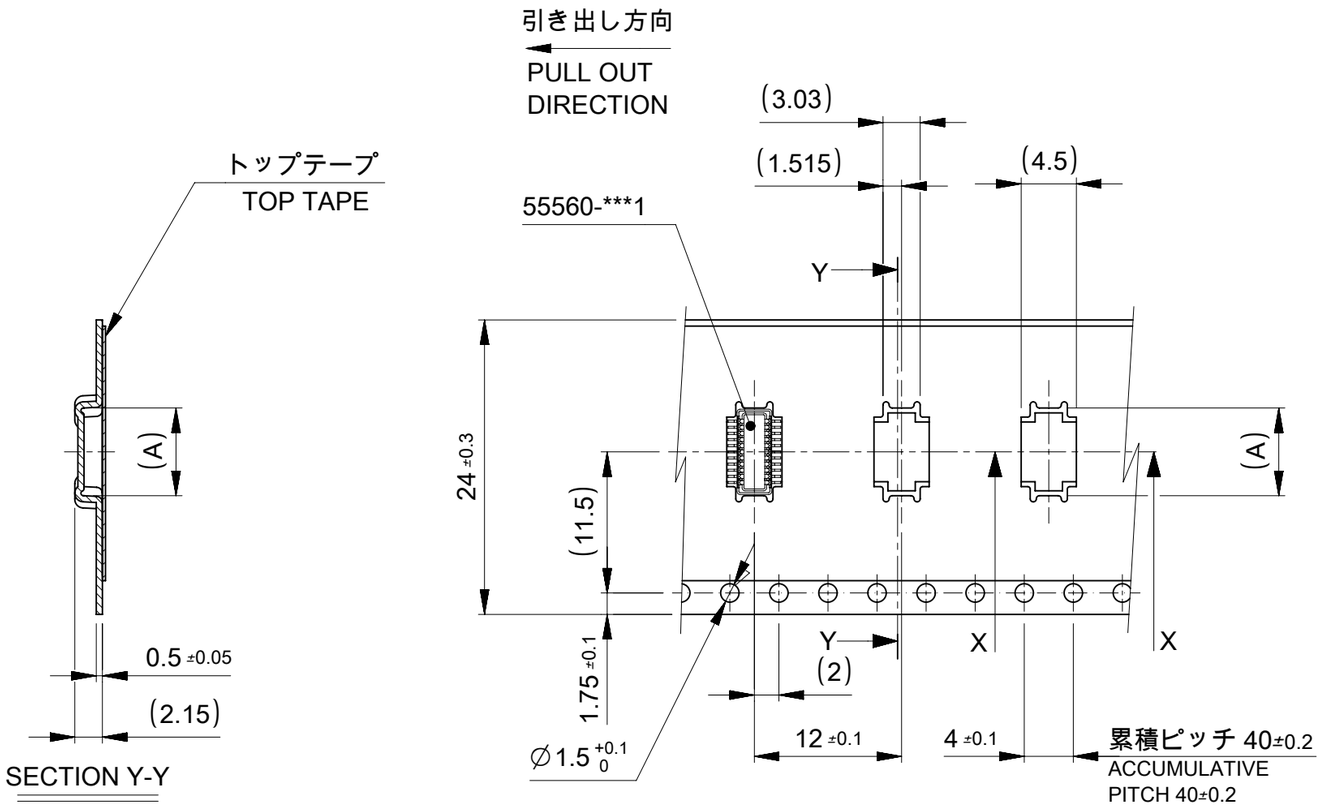

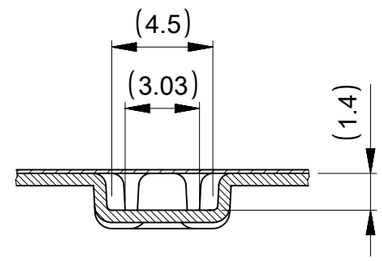

SECTION X-X
SCALE 5:1

24 mm幅キャリアテープ
24mm WIDTH CARRIER TAPE

キャリアテープ幅 CARRIER TAPE WIDTH	B	(A)	MATERIAL NO.	極数 CIRCUIT
24	25.5	14.15	55560-0507	50
		11.65	55560-0407	40
		10.15	55560-0347	34
		9.15	55560-0307	30
		7.65	55560-0247	24
		7.15	55560-0227	22

THIS DRAWING CONTAINS INFORMATION THAT IS PROPRIETARY TO MOLEX ELECTRONIC TECHNOLOGIES, LLC AND SHOULD NOT BE USED WITHOUT WRITTEN PERMISSION

DIMENSION UNITS	SCALE
mm	NTS

GENERAL TOLERANCES (UNLESS SPECIFIED)

ANGULAR TOL	± °
4 PLACES	±
3 PLACES	±
2 PLACES	±
1 PLACE	±
0 PLACES	±

DRAFT WHERE APPLICABLE MUST REMAIN WITHIN DIMENSIONS

GENERAL TOLERANCES (UNLESS SPECIFIED)

10 UNDER	±0.2
10 OVER 30 UNDER	±0.25
30 OVER	±0.3
ANGULAR	±3°

DRAFT WHERE APPLICABLE MUST REMAIN WITHIN DIMENSIONS

CURRENT REV DESC: REMOVED OBSOLETED PART NUMBERS AS PER PCN#515181

EC NO: 794166
DRWN: VISHAH2 2024/05/28
CHK'D: GGA 2024/08/20
APPR: GGA 2024/08/20

INITIAL REVISION:
DRWN: S.AIHARA 2000/11/28
APPR: M.FUKUSHIMA 2001/01/30

THIRD ANGLE PROJECTION | DRAWING: A3-SIZE | SERIES: 55560

molex

0.5 MM PITCH B-TO-B CONN.
HEIGHT = 1.5 PLUG EMBOSS TAPE PACKAGE

PRODUCT CUSTOMER DRAWING

DOCUMENT NUMBER	DOC TYPE	DOC PART	REVISION
SD-55560-007	PSD	001	L1

MATERIAL NUMBER	CUSTOMER	SHEET NUMBER
SEE SHEET 2-5	GENERAL	3 OF 5

DOCUMENT STATUS	P1	RELEASE DATE	2024/08/20 07:34:21

FORMAT: master-tb-prod-A3
REVISION: J1
DATE: 2021/05/01

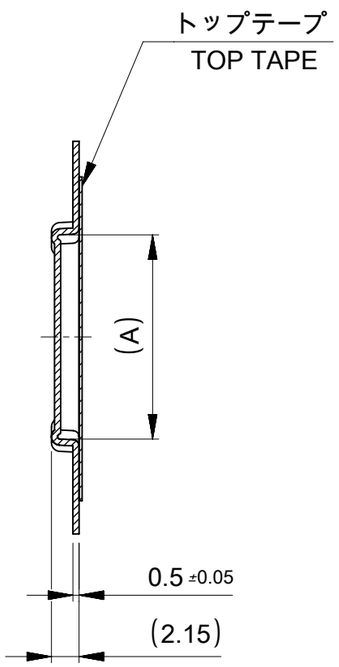

SECTION Y-Y

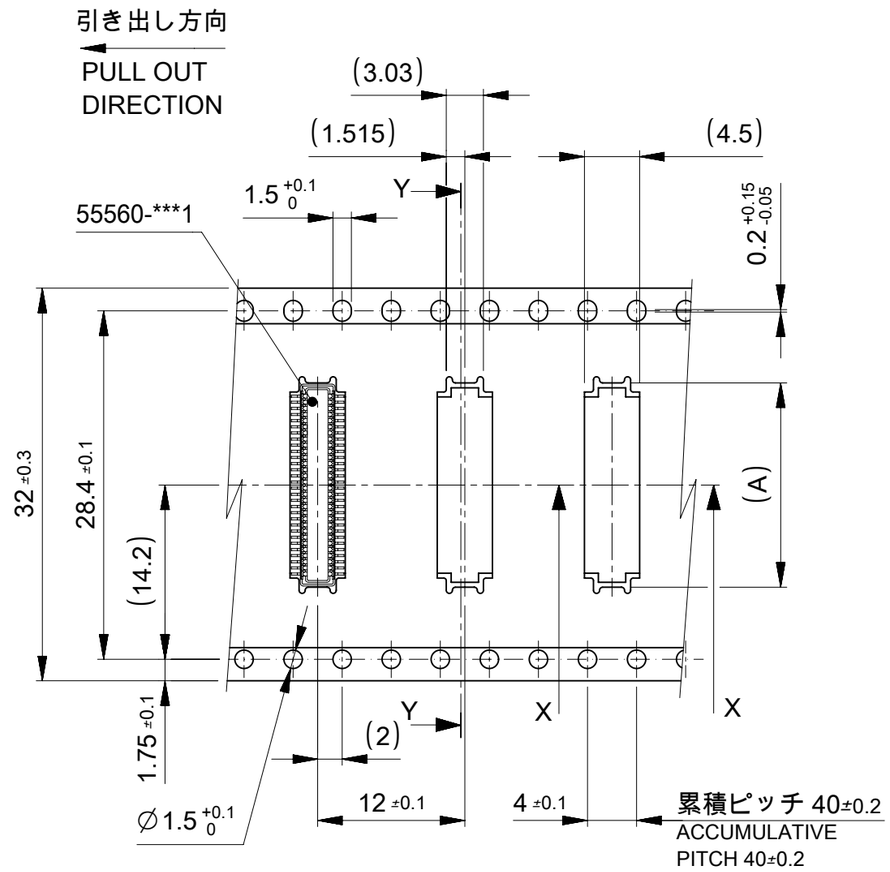

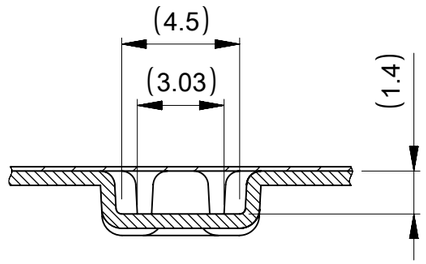

SECTION X-X
SCALE 5:1

32 mm幅キャリアテープ

32mm WIDTH CARRIER TAPE

32	33.5	16.65	55560-0607	60
キャリアテープ幅 CARRIER TAPE WIDTH	B	(A)	MATERIAL NO.	極数 CIRCUIT

THIS DRAWING CONTAINS INFORMATION THAT IS PROPRIETARY TO MOLEX ELECTRONIC TECHNOLOGIES, LLC AND SHOULD NOT BE USED WITHOUT WRITTEN PERMISSION

DIMENSION UNITS	SCALE
mm	NTS

GENERAL TOLERANCES (UNLESS SPECIFIED)	
10 UNDER	±0.2
10 OVER 30 UNDER	±0.25
30 OVER	±0.3
ANGULAR±3°	
DRAFT WHERE APPLICABLE MUST REMAIN WITHIN DIMENSIONS	

GENERAL TOLERANCES (UNLESS SPECIFIED)	
ANGULAR TOL	± °
4 PLACES	±
3 PLACES	±
2 PLACES	±
1 PLACE	±
0 PLACES	±
DRAFT WHERE APPLICABLE MUST REMAIN WITHIN DIMENSIONS	

CURRENT REV DESC: REMOVED OBSOLETED PART NUMBERS AS PER PCN#515181

EC NO: 794166
DRWN: VISHAH2 2024/05/28
CHK'D: GGA 2024/08/20
APPR: GGA 2024/08/20

INITIAL REVISION:
DRWN: S.AIHARA 2000/11/28
APPR: M.FUKUSHIMA 2001/01/30

molex

0.5 MM PITCH B-TO-B CONN.
HEIGHT = 1.5 PLUG EMBOSS TAPE PACKAGE

PRODUCT CUSTOMER DRAWING

DOCUMENT NUMBER	DOC TYPE	DOC PART	REVISION
SD-55560-007	PSD	001	L1

THIRD ANGLE PROJECTION	DRAWING	SERIES	MATERIAL NUMBER	CUSTOMER	SHEET NUMBER
	A3-SIZE	55560	SEE SHEET 2-5	GENERAL	4 OF 5

DOCUMENT STATUS	P1	RELEASE DATE	2024/08/20 07:34:21

FORMAT: master-tb-prod-A3
REVISION: J1
DATE: 2021/05/01

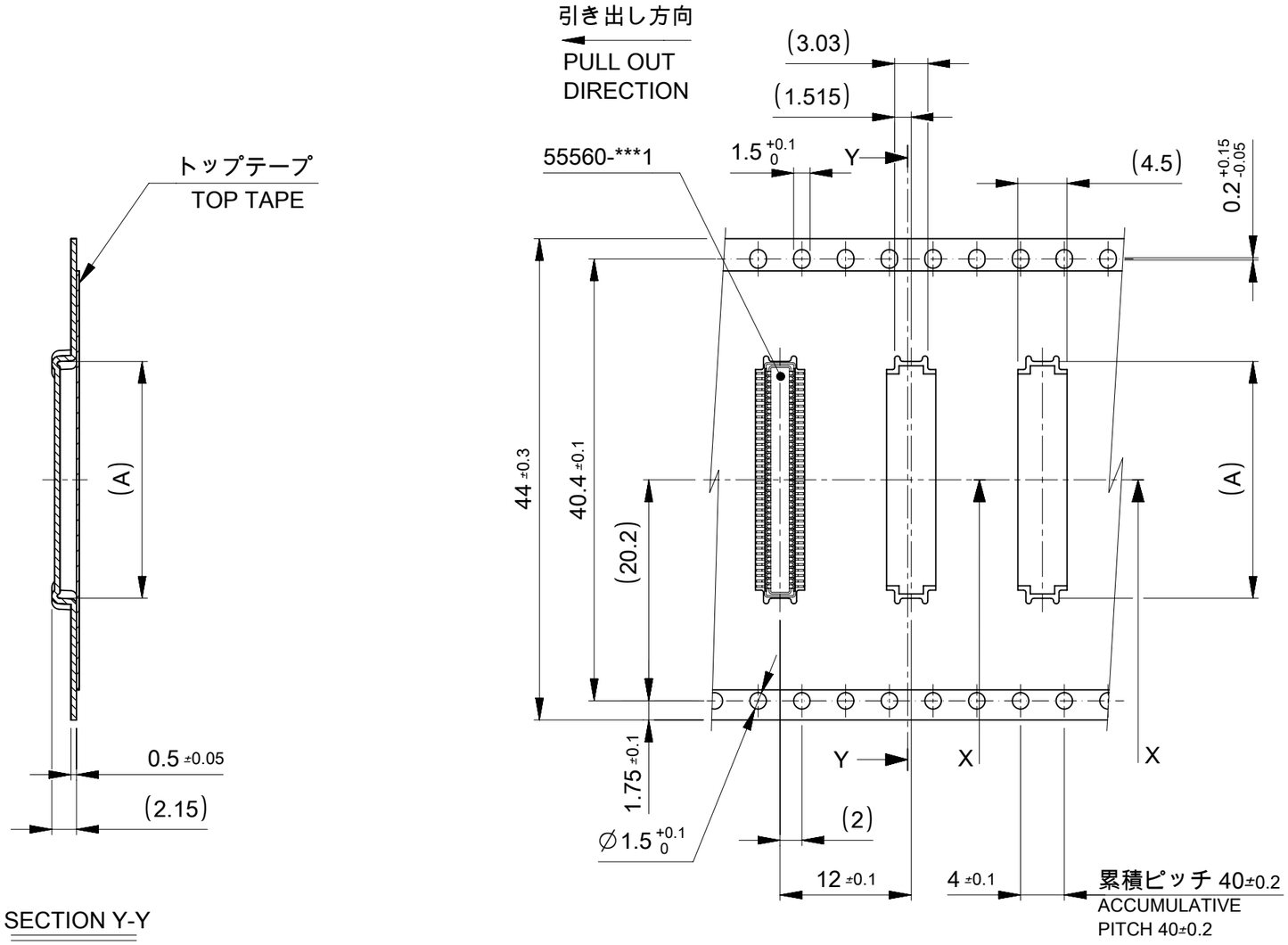

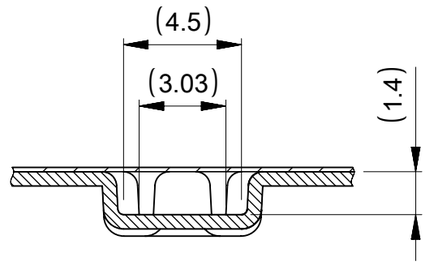

SECTION X-X
SCALE 5:1

44 mm幅キャリアテープ

44mm WIDTH CARRIER TAPE

44	45.5	21.65	55560-0807	80
キャリアテープ幅 CARRIER TAPE WIDTH	B	(A)	MATERIAL NO.	極数 CIRCUIT

THIS DRAWING CONTAINS INFORMATION THAT IS PROPRIETARY TO MOLEX ELECTRONIC TECHNOLOGIES, LLC AND SHOULD NOT BE USED WITHOUT WRITTEN PERMISSION

DIMENSION UNITS	SCALE
mm	NTS

GENERAL TOLERANCES (UNLESS SPECIFIED)

10 UNDER	±0.2
10 OVER 30 UNDER	±0.25
30 OVER	±0.3
ANGULAR±3°	

DRAFT WHERE APPLICABLE MUST REMAIN WITHIN DIMENSIONS

GENERAL TOLERANCES (UNLESS SPECIFIED)

ANGULAR TOL	± °
4 PLACES	±
3 PLACES	±
2 PLACES	±
1 PLACE	±
0 PLACES	±

DRAFT WHERE APPLICABLE MUST REMAIN WITHIN DIMENSIONS

CURRENT REV DESC: REMOVED OBSOLETED PART NUMBERS AS PER PCN#515181

EC NO: 794166
DRWN: VISHAH2 2024/05/28
CHK'D: GGA 2024/08/20
APPR: GGA 2024/08/20

INITIAL REVISION:
DRWN: S.AIHARA 2000/11/28
APPR: M.FUKUSHIMA 2001/01/30

THIRD ANGLE PROJECTION | DRAWING: A3-SIZE | SERIES: 55560

molex

0.5 MM PITCH B-TO-B CONN.
HEIGHT = 1.5 PLUG EMBOSS TAPE PACKAGE

PRODUCT CUSTOMER DRAWING

DOCUMENT NUMBER	DOC TYPE	DOC PART	REVISION
SD-55560-007	PSD	001	L1

MATERIAL NUMBER	CUSTOMER	SHEET NUMBER
SEE SHEET 2-5	GENERAL	5 OF 5

DOCUMENT STATUS	P1	RELEASE DATE	2024/08/20 07:34:21

FORMAT: master-tb-prod-A3
REVISION: J1
DATE: 2021/05/01